BEST QUALITY BEST QUALITY BEST
BEST
SELLER

Diva

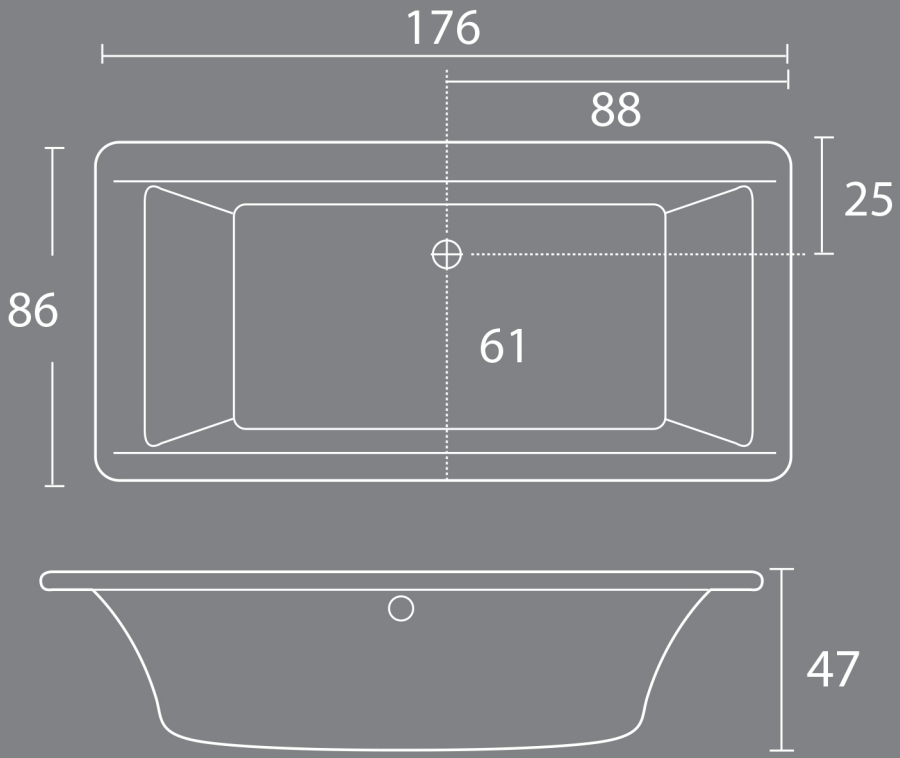

Type : Diva
Size : 176 x 86 x 47
Material : Acrylic/Marble/Onyx